Forces

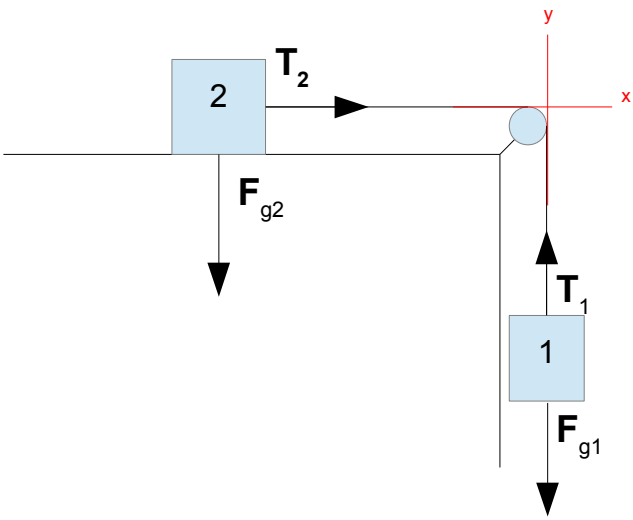

For block 1 (along y):

$$F_{net\ 1} = F_{g1} - T_1$$
$$m_1a_1 = F_{g1} - T_1$$
$$T_1 = m_1g - m_1a_1$$

For block 2 (along x):

$$F_{net\ 2} = T_2$$
$$m_2a_2 = T_2$$

Since they are connected by the same string, $T_1 = T_2 = T$ and $a_1 = a_2 = a$.

$$m_1g - m_1a = m_2a$$
$$m_2 = m_1((g/a) - 1)$$

Energy

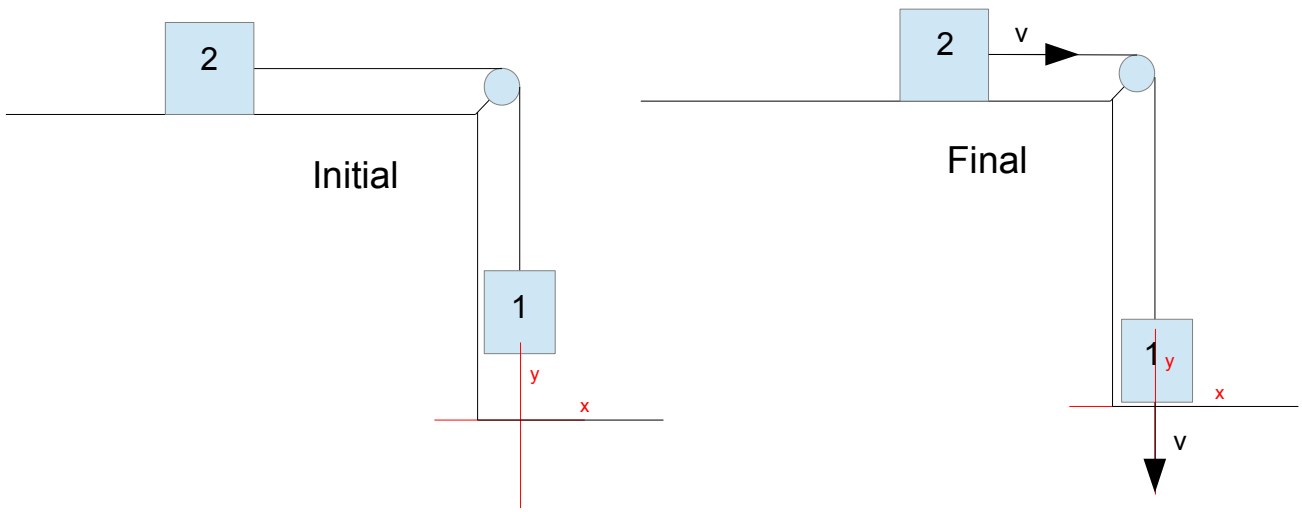

$$K_{i1} + K_{i2} + U_{i1} + U_{i2} = K_{f1} + K_{f2} + U_{f1} + U_{f2}$$
$$m_1gh_1 = m_1v^2/2 + m_2v^2/2$$
$$m_2 = m_1((2gh/v^2) - 1)\ ;\ h = \text{distance travelled}$$